Rangine Corporation
330 Reservoir Street
Needham, Ma. 02494
Tel: 781-455-8700 Fax: 781-455-8702

DATE: 5-28-08	BY: KT	RAKKS DWG. NO.:
JOB NAME: System 700 Components		PAGE NO.: ____ OF ____
		PART NO.:
		VERSION:

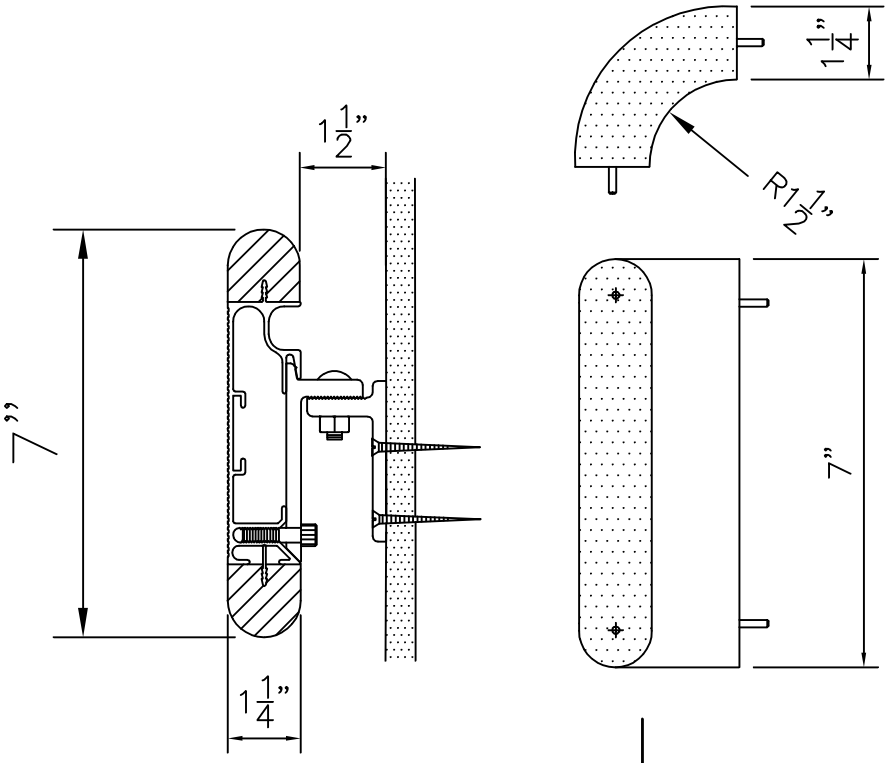

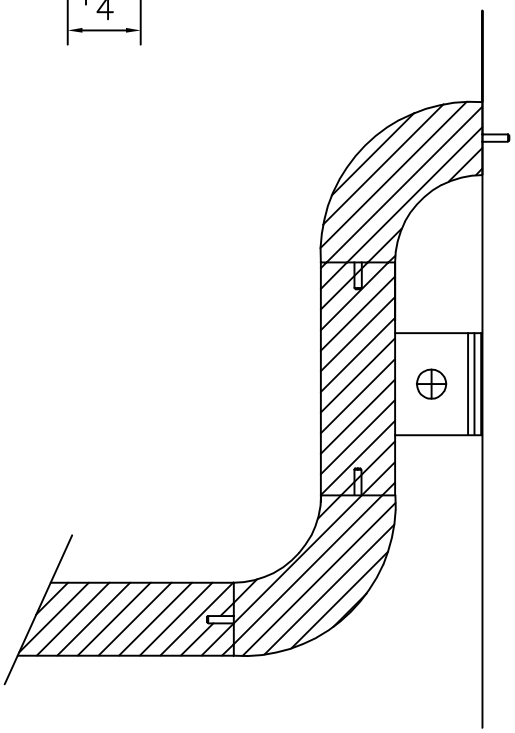

All designs are, and remain the property of Rangine Corporation. Rangine Corporation reserves the right to make changes in specifications, design, and/or construction with out prior notification.